DOUBLE ACTION ONE WAY HAND PUMP

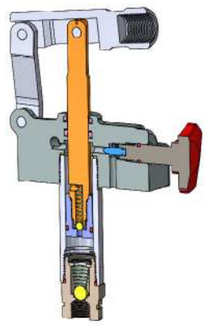

CLICK HERE
FOR 3D SECTION

TECHNICAL FEATURES AND OPTIONS

Working Temperature
-20 ºC / +80 ºC

Available Threads
BSP

Operating Pressure
Up to 310 Bar

Sealing Description
NBR

Available Sizes
25 cc to 45 cc

Material
GGG40

MAIN APPLICATIONS

OIL & GAS
AGRICULTURE
HYDRAULIC INDUSTRY
EARTH MOVING
HYDRAULIC EQUIPMENT
CONCRETE VEHICLES
VEHICLES
CHEMICAL INDUSTRY

INFORMATION

- OLEOCON Double Action One Way Hand Pumps are suitable for single acting cylinders.
- They have 2 sizes (25 cc and 45 cc) and 2 handle options, in order to provide precise control over various loads and systems.
- The body is made of cast-iron and the spool is nickel- plated.
- Easy-to-use.

WARNING

- Please do not expose to abnormal operating conditions. (E.g. oscillations, impulse pressures, water hammering, cavitation, and proportions of solid materials and abrasives)
- Please do not touch the product, when the working temperature is lower than -20°C or higher than +50°C.
- Make sure the system pressure is below the maximum working pressure.
- Please ensure the cleanliness of all connection surfaces to avoid dirt or dust accumulation in the circuit.
- Please ensure the alignment and full connection of the assembly parts.
- Please ensure that the OLEOCON product you have chosen is compatible with the temperature , material and pressure requirements of your system.
- Please contact OLEOCON technical support for any further questions.

TECHNICAL DRAWING

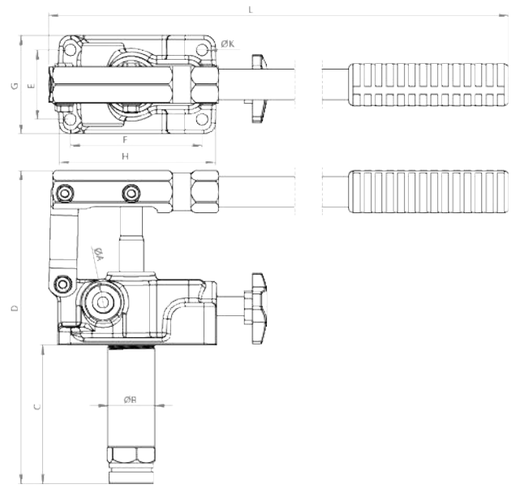

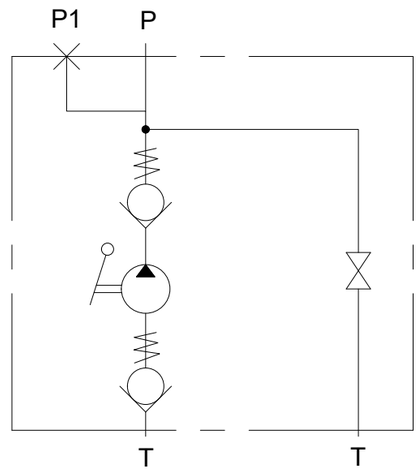

SIZE	DESCRIPTION	PORT A		DIAMETER		LENGTH									ØK (mm)	Flow (cc)	WEIGHT		PRESSURE	
				mm	inch		mm	inch		mm	inch		mm	inch			kg	lbs	MPa	Psi
25	OHP-25-2A-1W	G3/8	B	36	1,41	C	105	4,13	E	50	1,96	G	71	2,79	8,5	25	2950	6490	31	4496
			L	560	22,04	D	230	9,05	F	95	3,74	H	115	4,52						
45	OHP-45-2A-1W	G3/8	B	40	1,57	C	115	4,52	E	50	1,96	G	71	2,79	8,5	45	3000	6600	15	2175
			L	560	22,04	D	230	9,05	F	95	3,74	H	115	4,52						